P5RS - Rotary Actuators

The P5RS rotary table units provide precise control even under heavy loads, with specially designed load fixing and centring capabilities. End stroke cushioning using supplied adjusting bolts or optional shock absorbers offers dependable linear cushioning enabling objects to be carried and positioned safely and securely.

- Bores Ø16, 20, 25 and 32mm
- Twin rack and pinion
- Adjustable between 0° and 190°
- Magnetic piston standard
- Stroke adjusters standard
- Optional shock absorbers bore Ø20 and 25mm
- Easy mounting of work piece

Operating Information

Pressure range:	1 to 9 bar
Temperature range:	-5° to 60° C
Filtration requirements:	
Air fltration	40 micron or better
Air lubrication	Not necessary*
Air humidity	Low moisture content (dry)

* Addition of lubrication will greatly increase service life

For more information see www.parker.com/euro_pneumatic

Ordering Information: P5RS

Bore mm	Description	Ports (BSPP)	Rotation	Torque (N-m at 5 bar)	Weight (kg)	**Order code**
16	Rotary table, stroke adjusters	1/8	190 degrees	1.21	0.7	**P5RS-016DSG190B**
20	Rotary table, stroke adjusters	1/8	190 degrees	2.51	1.16	**P5RS-020DSG190B**
25	Rotary table, stroke adjusters	1/8	190 degrees	4.91	1.57	**P5RS-025DSG190B**
32	Rotary table, stroke adjusters	1/8	190 degrees	9.86	3.07	**P5RS-032DSG190B**

Note: Above units are supplied with rubber buffer stroke adjusters.

Optional Shock Absorbers

Bore mm	Rotary Actuator	**Order code**
16	P5RS-016DSG190B	**N/A**
20	P5RS-020DSG190B	**N/A**
25	P5RS-025DSG190B	**MC150M**
32	P5RS-032DSG190B	**MC225M**

Sensors - Series P8S-F

Magnetic Sensor	**M8 - Snap in**	**Flying lead**
	0.15 m PUR cable with M8 connector	2 m PUR cable
Reed, NO	**P8S-FRSUS**	**P8S-FRFXS**

Load capacity P5RS Rotary Table

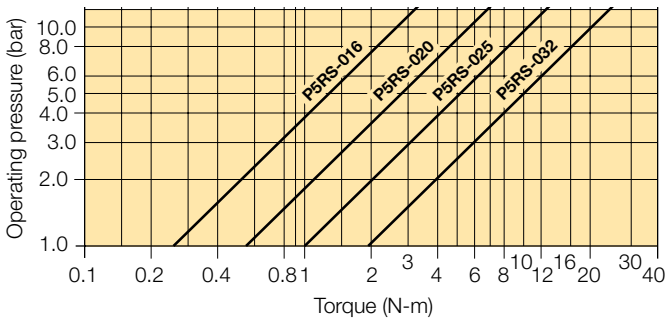

Allowable load

Set the load and moment to be applied to the table within the allowable values shown in the table below.(Values outside of limitations will cause excessive play, deteriorate accuracy, and shorten service life).

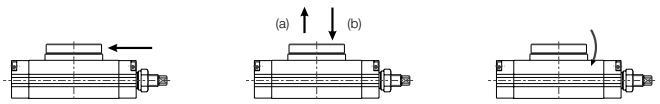

Bore	Allowable radial load (N)	Allowable thrust load (N) (a)	(b)	Allowable moment (Nm)
16	78	74	78	2.4
20	147	137	137	4.0
25	196	197	363	5.3
32	314	296	451	9.7

Dimensions P5RS Rotary Table

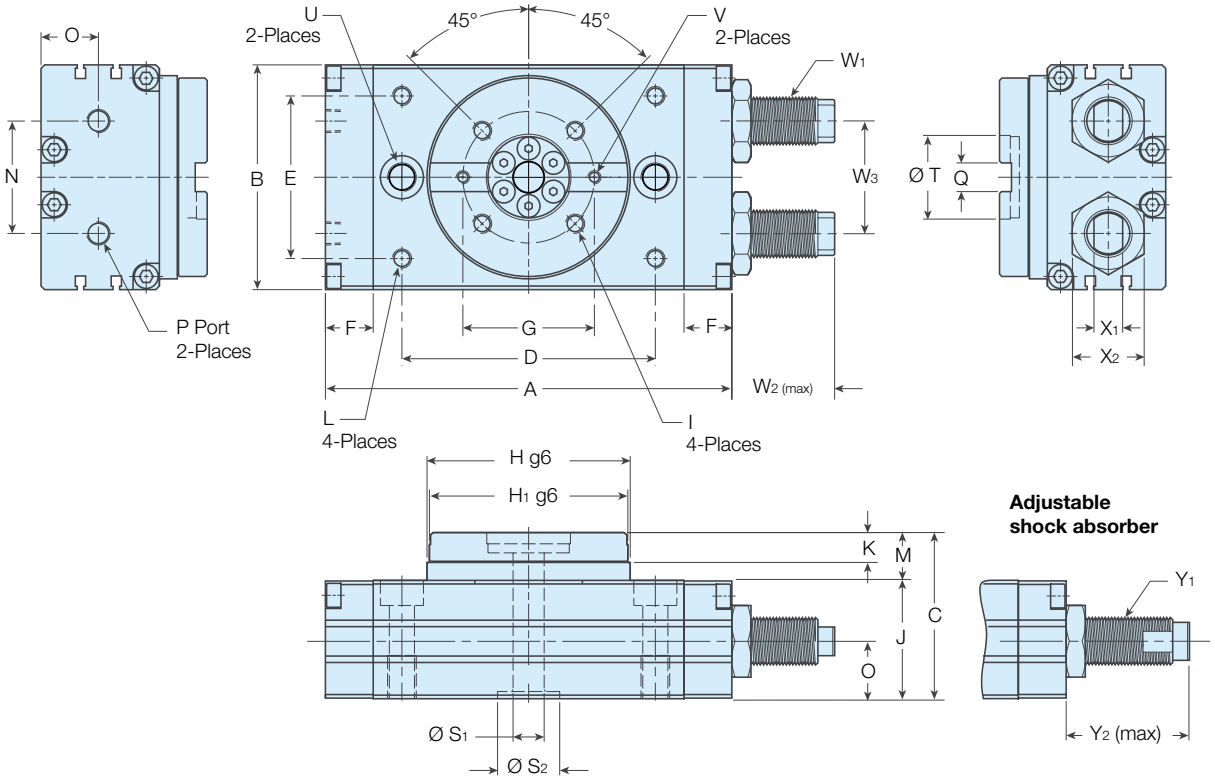

Bore mm	A	B	C	D	E	F	G	H	H_1	I	J	K	L	M	N	O	P BSPP	Q
16	108	58	47	62	38	15	38	50	48	M5 x 7 Dp, P.C.D38	33	8	M5 x 8 Dp	14	26	15.5	PT 1/8	8 $^{+0.03}_{-0}$ x 3.3 Dp
20	128	68	55	78	47	15	46	62.5	60	M6 x 7 Dp, P.C.D46	38	10	M6 x 8 Dp	17	27	18.5	PT 1/8	10 $^{+0.03}_{-0}$ x 3.5 Dp
25	135.5	77	58.5	84	55	15.5	48	67	65	M6 x 9 Dp, P.C.D48	41.5	10	M6 x 8 Dp	17	37	20	PT 1/8	12 $^{+0.03}_{-0}$ x 4 Dp
32	170	94	69.5	106	68	20	55	85	83	M8 x 10 Dp, P.C.D55	49.5	12.5	M8 x 8.5 Dp	20	47	24	PT 1/8	12 $^{+0.03}_{-0}$ x 5 Dp

Bore mm	S_1	S_2	T	U	V	W_1	W_2	W_3	X_1	X_2	Y_1	Y_2
16	6	17 (H7) x 2.5 Dp	24 (H7) x 3 Dp	2-Ø 6.8 thru, Ø11 x 6.5 Dp, M8 x 12 Dp (Sink)	M3 x 4 Dp	M10 x 1,0	27	26	7	17	N/A	N/A
20	10	22 (H7) x 2.5 Dp	32 (H7) x 3 Dp	2-Ø 8.6 thru, Ø14 x 8.5 Dp, M10 x 15 Dp (Sink)	M4 x 6 Dp	M12 x 1,0	23	32	8	19	N/A	N/A
25	13	22 (H7) x 3 Dp	32 (H7) x 3.7 Dp	2-Ø 8.6 thru, Ø14 x 8.5 Dp, M10 x 15 Dp (Sink)	M4 x 5 Dp	M14 x 1,5	36	37	8	22	MC150M	52
32	13	26 (H7) x 3 Dp	35 (H7) x 4.7 Dp	2-Ø 10.5 thru, Ø18 x 10.5 Dp, M12 x 18 Dp (Sink)	M5 x 5 Dp	M20 x 1.5	43	47	12	30	MC225M	62

Dimensions in (mm)